30V N-Channel Enhancement Mode MOSFET

Description

The PECN3400BVR uses advanced trench technology to provide excellent $R_{DS(ON)}$, low gate charge and high density cell Design for ultra low on-resistance. This device is suitable for use as a load switch or in PWM applications.

General Features

- V_{DS} =30V，I_D =5A
  $R_{DS(ON)}$(Typ.)=43mΩ @V_{GS}=2.5V
  $R_{DS(ON)}$(Typ.)=31mΩ @V_{GS}=4.5V
- High power and current handing capability
- Lead free product is acquired
- Surface mount package

Application

- PWM applications
- Load switch

Package

- SOT-23

Schematic diagram

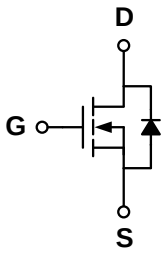

Marking and pin assignment

SOT-23
(TOP VIEW)

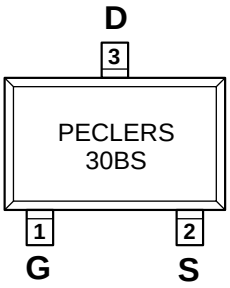

Ordering Information

Part Number	Storage Temperature	Package	Devices Per Reel
PECN3400BVR	-55°C to +150°C	SOT-23	3000

Absolute Maximum Ratings (TA=25℃ unless otherwise noted)

parameter	symbol	limit	unit
Drain-source voltage	V_{DS}	30	V
Gate-source voltage	V_{GS}	±12	V
Drain current-continuous[a]@Tj=125℃	I_D	5	A
-pulse *d*[b]	I_{DM}	30	A
Drain-source Diode forward current	Is	2	A
Maximum power dissipation	P_D	1.4	W
Operating junction Temperature range	Tj	-55—150	℃

Electrical Characteristics (TA=25℃ unless otherwise noted)

Parameter	Symbol	Condition	Min	Typ	Max	Unit
OFF Characteristics						
Drain-source breakdown voltage	BV_{DSS}	V_{GS}=0V, I_D=250μA	30	-	-	V
Zero gate voltage drain current	I_{DSS}	V_{DS}=30V, V_{GS}=0V	-	-	1	μA
Gate-body leakage	I_{GSS}	V_{DS}=0V, V_{GS}=±12V	-	-	±100	nA
ON Characteristics						
Gate threshold voltage	$V_{GS(th)}$	V_{DS}=V_{GS}, I_D=250μA	0.7	0.9	1.4	V
Drain-source on-state resistance	$R_{DS(ON)}$	V_{GS}=4.5V, I_D=5A	-	31	45	mΩ
		V_{GS}=2.5V, I_D=4A		43	59	
Forward transconductance	gfs	V_{GS}=5V, I_D=5A	-	33	-	S
Dynamic Characteristics						
Input capacitance	C_{ISS}	V_{DS}=15V ,V_{GS}=0V f=1.0MHz	-	822	-	pF
Output capacitance	C_{OSS}		-	98	-	
Reverse transfer capacitance	C_{RSS}		-	76	-	
Switching Characteristics						
Turn-on delay time	$t_{D(ON)}$	V_{DS}=15V V_{GS}=10V R_L=2.6 ohm R_{GEN}=3ohm	-	3.3	-	ns
Rise time	tr		-	4.8	-	
Turn-off delay time	$t_{D(OFF)}$		-	25	-	
Fall time	tf		-	4	-	
Total gate charge	Qg	V_{DS}=15V,I_D=5.8A V_{GS}=4.5V	-	9.5	-	nC
Gate-source charge	Qgs		-	1.5	-	
Gate-drain charge	Qgd		-	3	-	
DRAIN-SOURCE DIODE CHARACTERISTICS						
Diode forward voltage	V_{SD}	V_{GS}=0V,Is=1A	-	0.76	1.16	V

Notes:

a. surface mounted on FR4 board,t≤10sec

b. pulse test: pulse width≤300μs,duty≤2%

c. guaranteed by design, not subject to production testing

Thermal Characteristics

Thermal Resistance junction-to ambient	Rth JA	100	℃/W

Typical Performance Characteristics

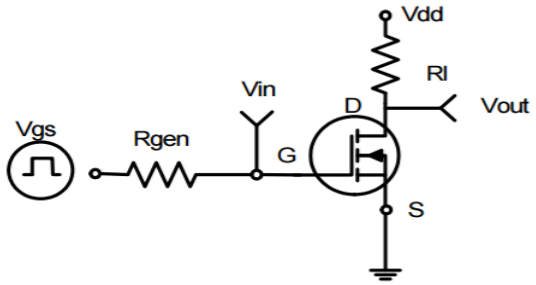

Figure 1:Switching Test Circuit

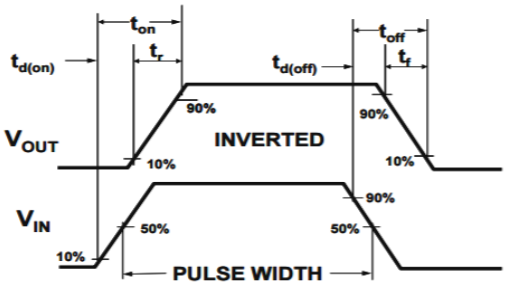

Figure 2:Switching Waveforms

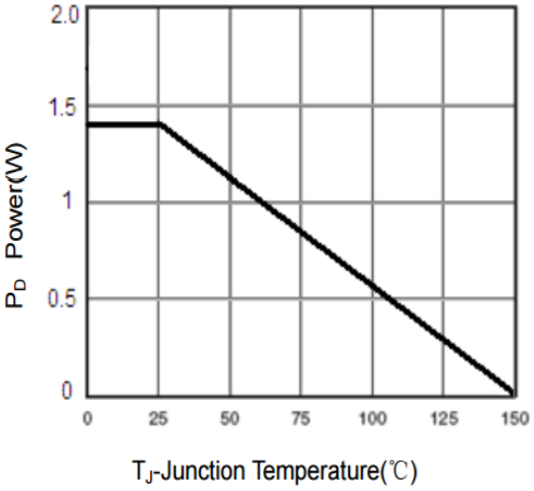

Figure 3 Power Dissipation

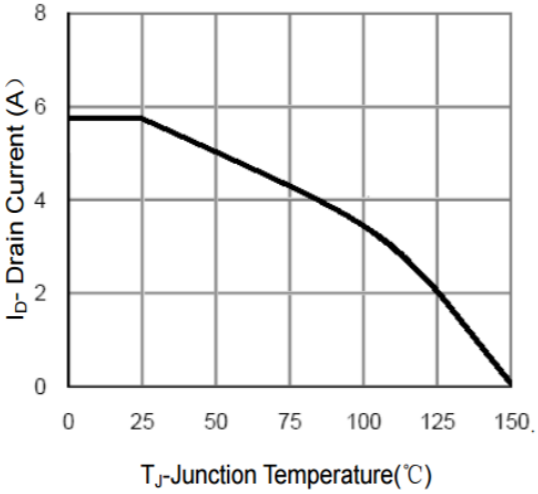

Figure 4 Drain Current

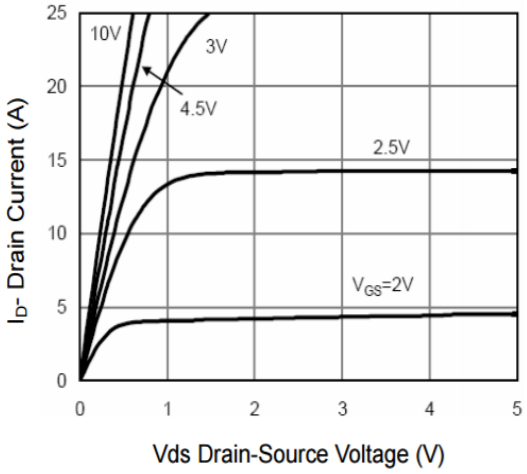

Figure 5 Output Characteristics

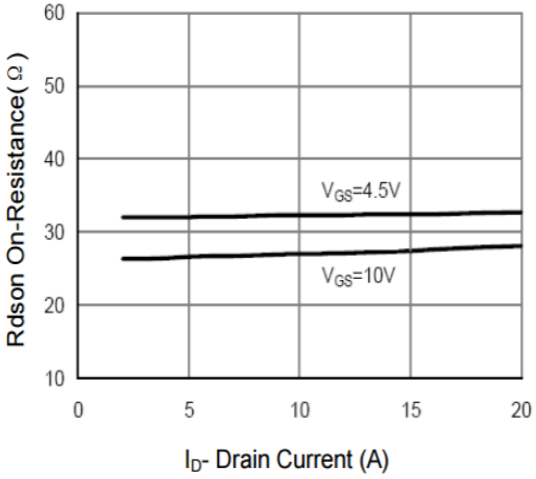

Figure 6 Drain-Source On-Resistance

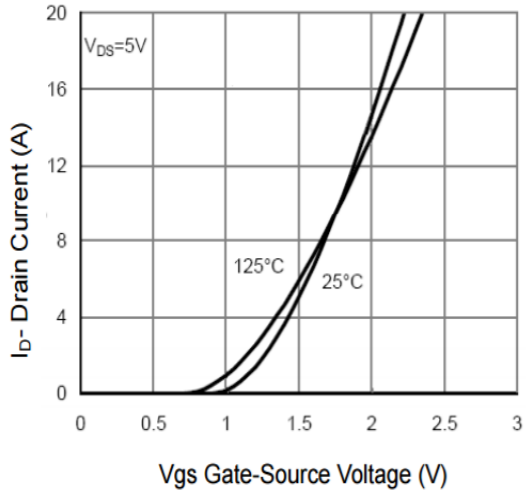

Figure 7 Transfer Characteristics

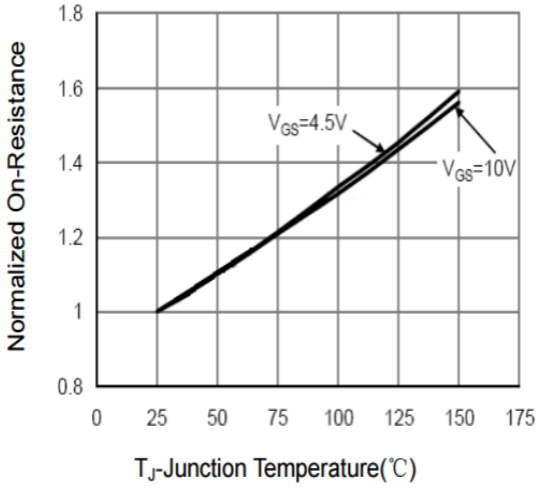

Figure 8 Drain-Source On-Resistance

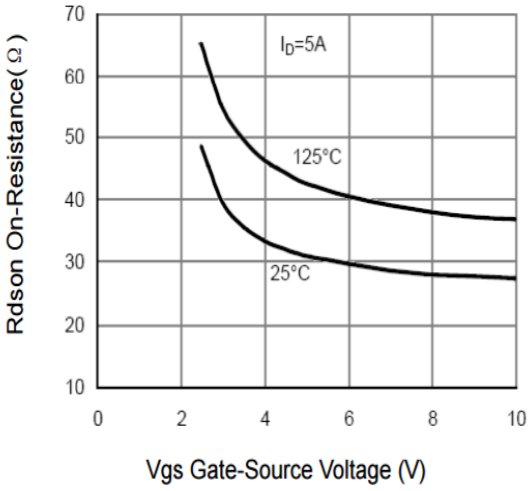

Figure 9 Rdson vs Vgs

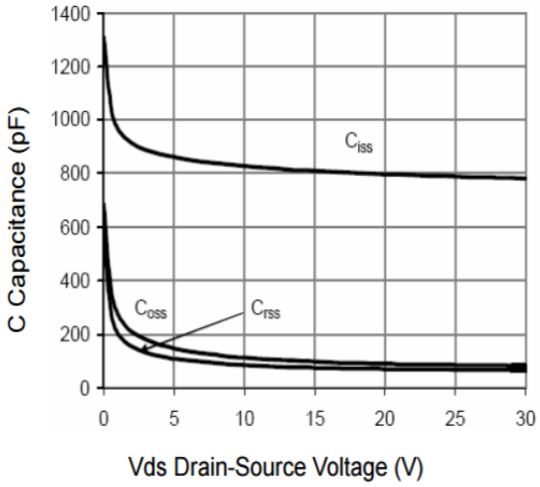

Figure 10 Capacitance vs Vds

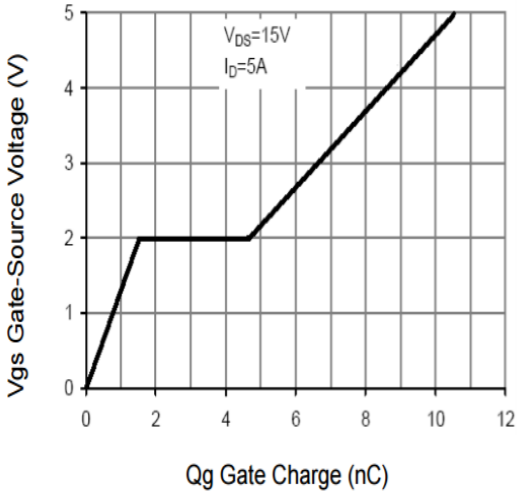

Figure 11 Gate Charge

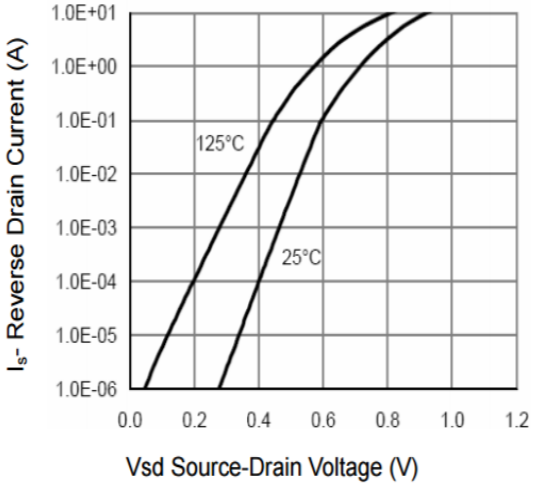

Figure 12 Source- Drain Diode Forward

Gate Charge Test Circuit & Waveform

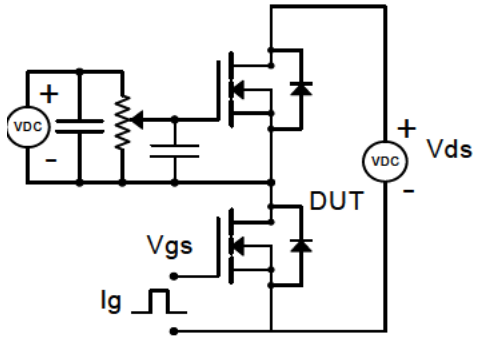

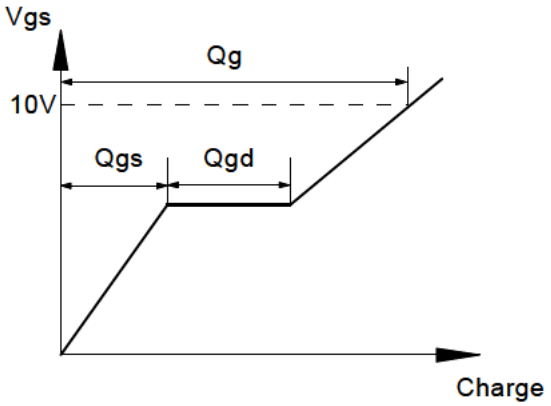

Resistive Switching Test Circuit & Waveforms

Resistive Switching Test Circuit & Waveforms

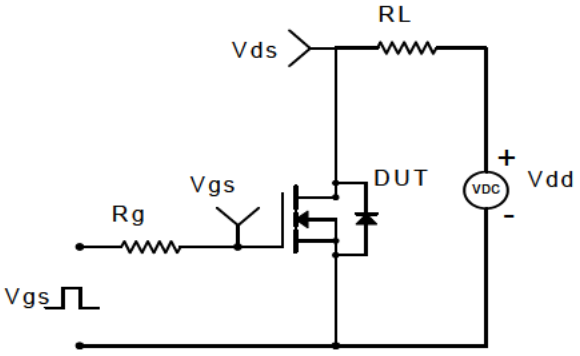

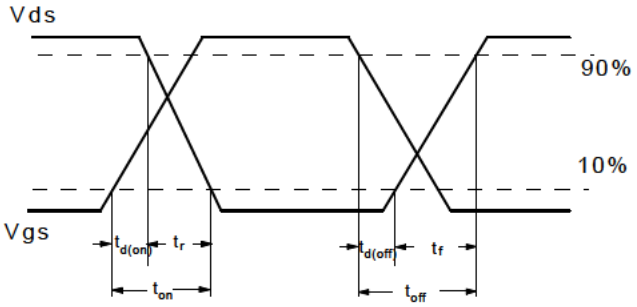

Diode Recovery Test Circuit & Waveforms

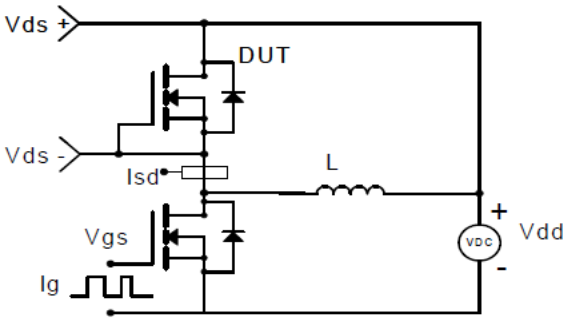

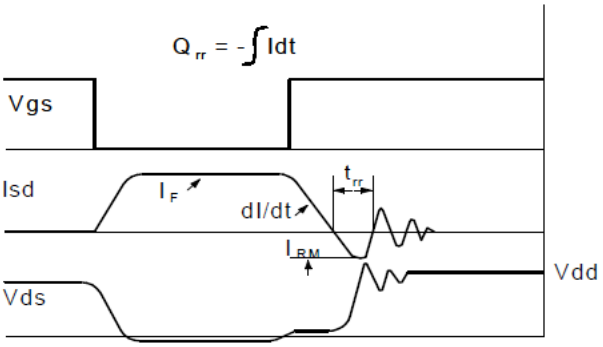

Package Information

- **SOT-23**

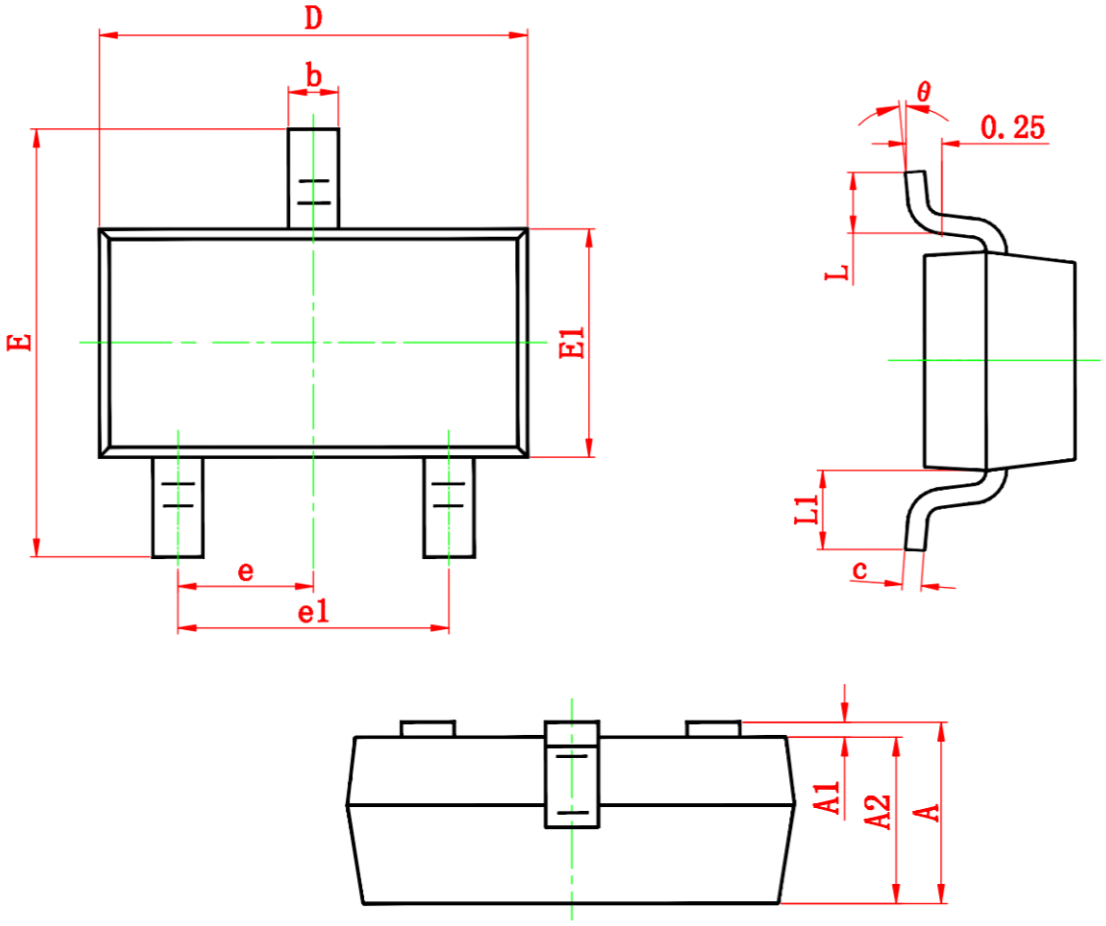

Symbol	Dimensions In Millimeters		Dimensions In Inches	
	Min.	Max.	Min.	Max.
A	0.900	1.150	0.035	0.045
A1	0.000	0.100	0.000	0.004
A2	0.900	1.050	0.035	0.041
b	0.300	0.500	0.012	0.020
c	0.080	0.150	0.003	0.006
D	2.800	3.000	0.110	0.118
E	2.250	2.550	0.089	0.100
E1	1.200	1.400	0.047	0.055
e	0.950 TYP.		0.037 TYP.	
e1	1.800	2.000	0.071	0.079
L	0.300	0.500	0.012	0.020
L1	0.550 REF.		0.022 REF.	
θ	0°	8°	0°	8°